US00D720974S

(12) United States Design Patent
Papazian

(10) **Patent No.: US D720,974 S**
(45) **Date of Patent: ** Jan. 13, 2015**

(54) **WRENCH**

(71) Applicant: **Harry Papazian**, Staten Island, NY (US)

(72) Inventor: **Harry Papazian**, Staten Island, NY (US)

(**) Term: **14 Years**

(21) Appl. No.: **29/487,167**

(22) Filed: **Apr. 6, 2014**

(51) **LOC (10) Cl.** **08-05**

(52) **U.S. Cl.**
USPC **D8/22**

(58) **Field of Classification Search**
USPC D8/21–23, 82, 83, 88, 89, 107; 81/60, 81/177.1, 177.85, 121.1, 124.3, 165–170, 81/110.1, 176.2, 124.6, 176.1, 176.15, 81/177.2, 133, 157, 173
See application file for complete search history.

(56) **References Cited**

U.S. PATENT DOCUMENTS

D156,732	S	*	1/1950	Hoeflicker	D8/22
2,637,235	A	*	5/1953	Licari	81/180.1
3,320,836	A		5/1967	Hagerman	
4,234,987	A	*	11/1980	Charette	7/139
4,356,743	A		11/1982	Muschalek, Jr.	
5,237,715	A	*	8/1993	Bane, III	7/139
5,263,392	A		11/1993	Schoen	
D351,541	S	*	10/1994	Smith	D8/28
5,791,213	A		8/1998	Young	
D467,478	S	*	12/2002	Harewood	D8/26
6,523,818	B1		2/2003	Le Vert et al.	
D595,555	S	*	7/2009	Vanderbeek	D8/89
D607,299	S	*	1/2010	Albertson	D8/105
2006/0060037	A1		3/2006	Haggerty	

* cited by examiner

Primary Examiner — Randall Gholson
(74) *Attorney, Agent, or Firm* — Michael J. Feigin, Esq.; Feigin & Associates, LLC

(57) **CLAIM**

The ornamental design for a wrench, as shown and described.

DESCRIPTION

FIG. **1** is a top right side perspective view of my design for a wrench;
FIG. **2** is a bottom right side perspective view thereof;
FIG. **3** is a bottom front right side perspective view thereof;
FIG. **4** is a left side view thereof;
FIG. **5** is a top view thereof;
FIG. **6** is a bottom view thereof; and,
FIG. **7** is a front view thereof.

1 Claim, 7 Drawing Sheets

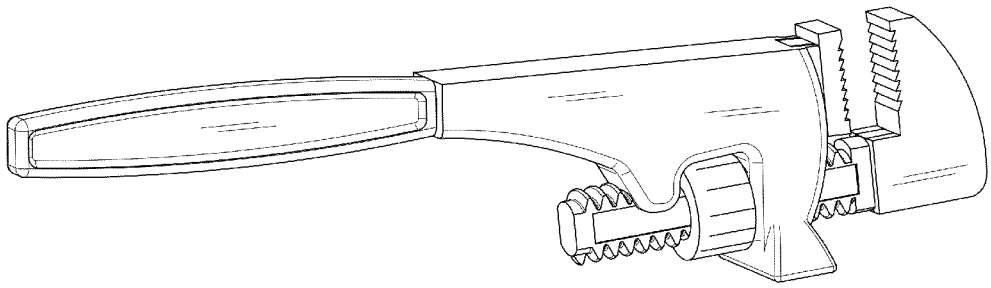

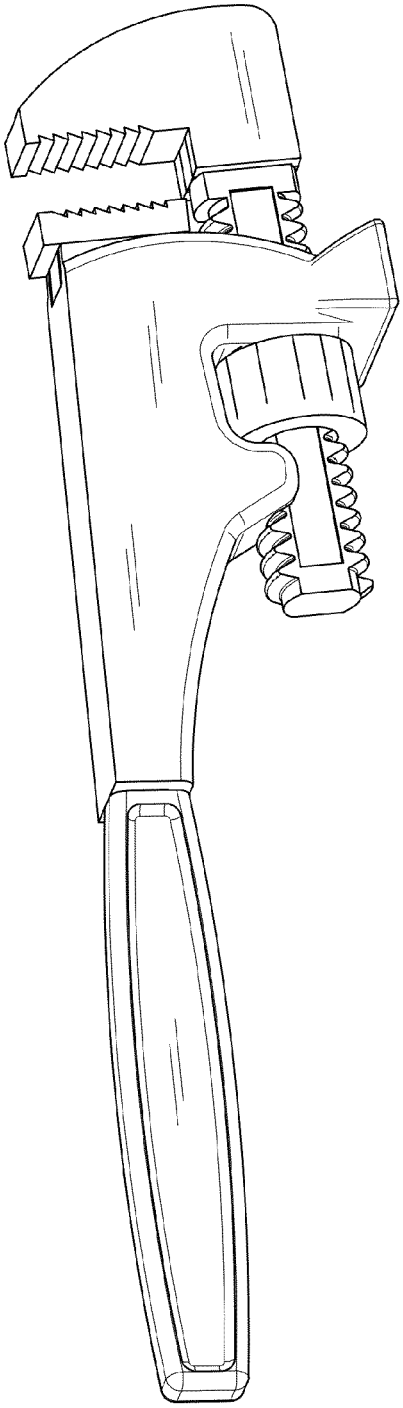

FIG. 1

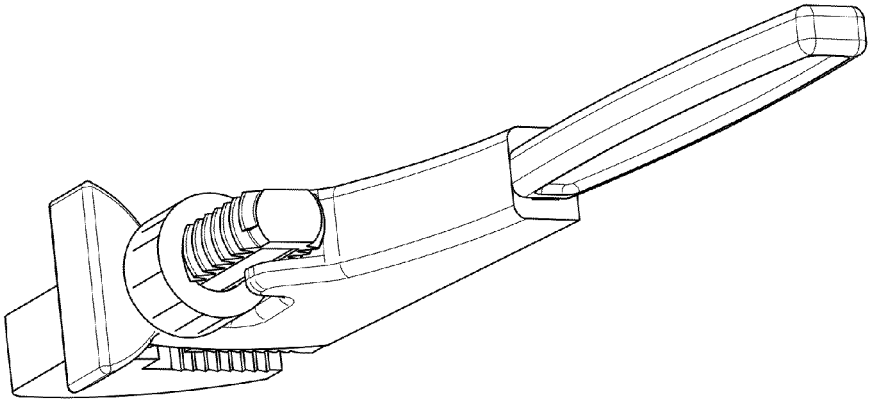

FIG. 2

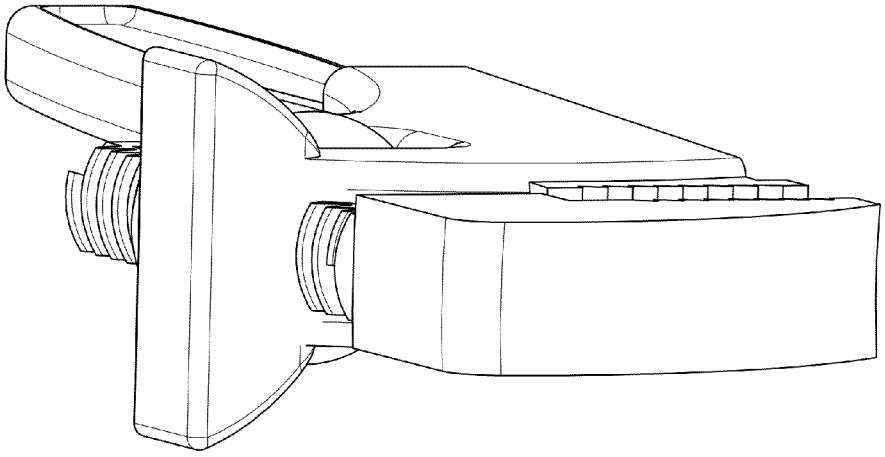

FIG. 3

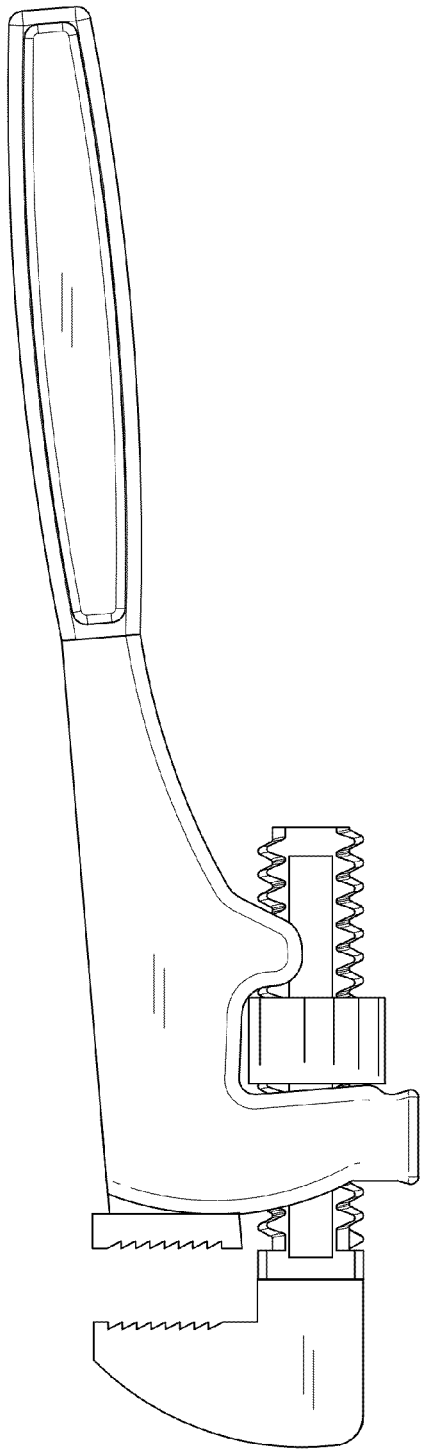

FIG. 4

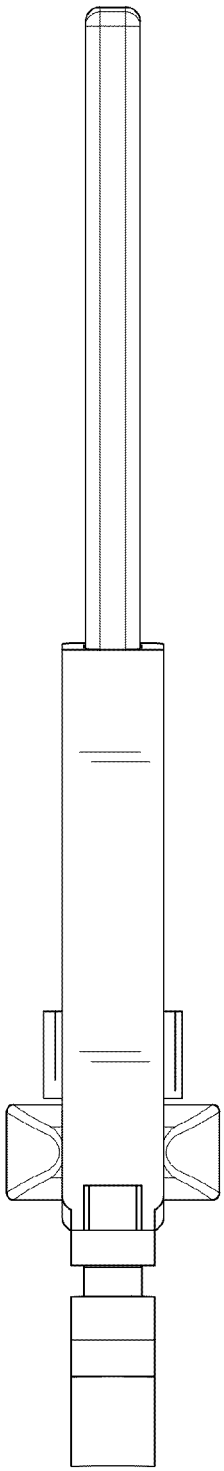

FIG. 5

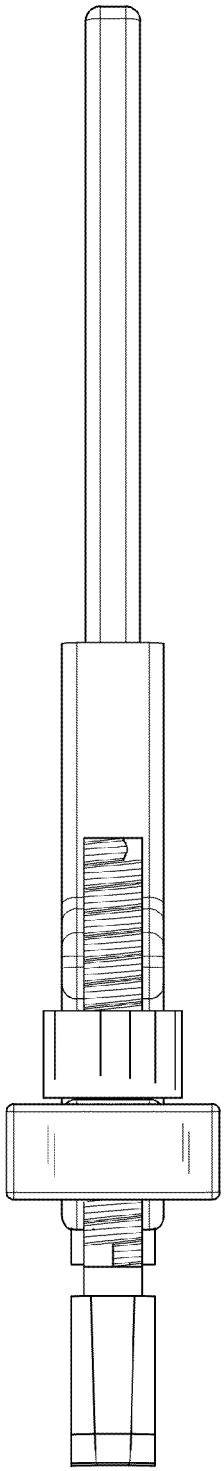

FIG. 6

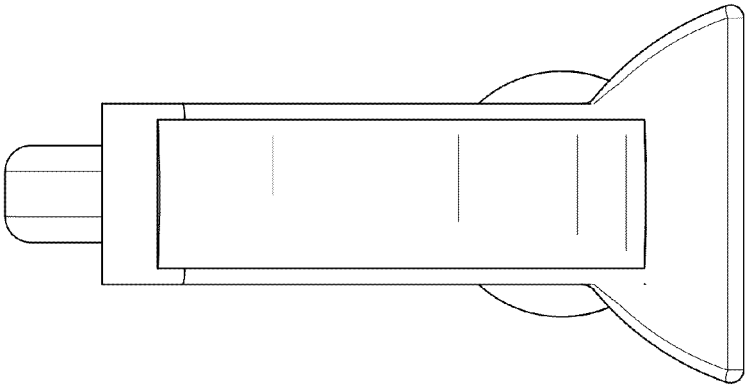

FIG. 7