US009004760B2

(12) **United States Patent**
Tzortzis

(10) **Patent No.: US 9,004,760 B2**
(45) **Date of Patent: Apr. 14, 2015**

(54) **BAG WITH DETACHABLE HANGING ACCESSORY PORTION**

(71) Applicant: **Sahra Tzortzis**, New York, NY (US)

(72) Inventor: **Sahra Tzortzis**, New York, NY (US)

(*) Notice: Subject to any disclaimer, the term of this patent is extended or adjusted under 35 U.S.C. 154(b) by 6 days.

(21) Appl. No.: **13/916,872**

(22) Filed: **Jun. 13, 2013**

(65) **Prior Publication Data**

US 2014/0369628 A1 Dec. 18, 2014

(51) **Int. Cl.**
B65D 30/22 (2006.01)
B65D 33/06 (2006.01)

(52) **U.S. Cl.**
CPC ***B65D 33/06*** (2013.01)

(58) **Field of Classification Search**
CPC .. A45C 3/004; A45C 13/02; A45C 2003/007; A45C 3/00; Y10S 190/903
USPC 383/22, 23, 38, 40, 37, 39, 66; 190/107, 190/110, 113, 115
See application file for complete search history.

(56) **References Cited**

U.S. PATENT DOCUMENTS

3,122,225 A * 2/1964 Ward 190/108
3,291,266 A * 12/1966 Komroff 190/1
3,315,772 A * 4/1967 Katz 206/287.1
3,512,621 A * 5/1970 Teetor 206/287
3,777,862 A * 12/1973 Zipper 190/107
3,944,032 A * 3/1976 Samhammer et al. 206/292
4,391,396 A * 7/1983 Brady 224/609
4,998,603 A 3/1991 Nordstrom
5,197,525 A * 3/1993 Cantor 150/102
5,207,303 A * 5/1993 Oswalt et al. 190/108
5,413,199 A * 5/1995 Clement 190/108
5,515,954 A * 5/1996 Nordstrom ..... 190/18 A
5,566,797 A * 10/1996 Van Himbeeck ..... 190/18 A
6,000,509 A * 12/1999 Chisholm 190/109
6,039,474 A * 3/2000 DeChant 383/66
6,076,666 A 6/2000 Santa-Maria
6,129,210 A 10/2000 Rustemeyer et al.
6,193,034 B1 2/2001 Fournier
6,196,718 B1 * 3/2001 DeChant 383/66
6,334,519 B1 * 1/2002 Tong 190/107
6,883,654 B2 * 4/2005 Godshaw et al. 190/115
6,948,599 B2 9/2005 Rodrigue et al.
7,051,908 B2 5/2006 Mignano et al.
7,171,707 B2 2/2007 Landay
7,207,426 B2 * 4/2007 Godshaw et al. 190/1
D552,349 S * 10/2007 Greiner D3/279
D566,964 S * 4/2008 Greiner D3/293
D573,793 S * 7/2008 Bakker D3/301
7,559,423 B2 * 7/2009 Vosloo 206/315.1
7,604,102 B2 * 10/2009 Albritton 190/107
7,861,857 B2 * 1/2011 Vorderkunz 206/289

(Continued)

Primary Examiner — Jes F Pascua
Assistant Examiner — Peter Helvey
(74) *Attorney, Agent, or Firm* — Michael J. Feigin, Esq.; Feigin & Associates, LLC

(57) **ABSTRACT**

In an embodiment of the disclosed technology, a bag is used for transporting and organizing items. The bag is generally formed of a removably attachable upper and a lower portion. The upper portion forms at least a portion of one side of the bag and is attached to the lower portion by a fastening mechanism. The lower portion forms the bottom and at least a portion of the sides of the bag. The upper portion is detachable to provide a hanging accessory organizer, having pockets and suspension device. In embodiments of the disclosed technology, access to the bag may be provided by an additional fastenable opening. Zippers may be used as the fasteners, and may run parallel to one another, completely or partially surrounding the perimeter of the upper portion.

11 Claims, 7 Drawing Sheets

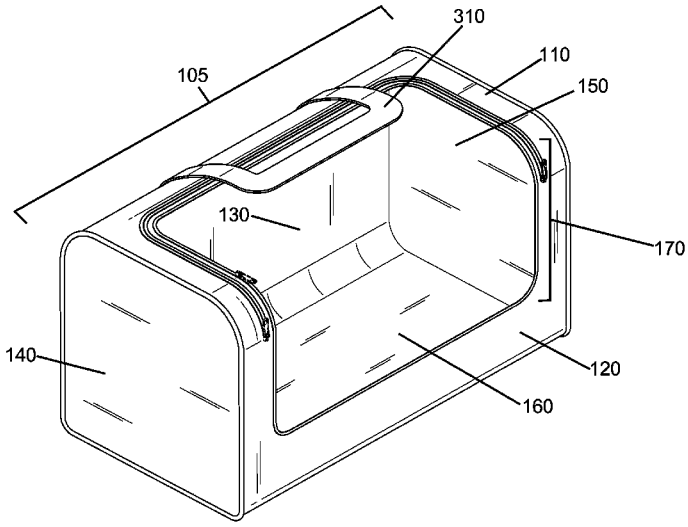

(56) **References Cited**

U.S. PATENT DOCUMENTS

8,074,853	B1 *	12/2011	Hirshberg	224/655
8,181,775	B2	5/2012	Bunn	
8,235,206	B2 *	8/2012	Siegel et al.	206/279
8,348,054	B2	1/2013	Dragan	
2002/0074199	A1 *	6/2002	Albritton	190/107
2004/0007433	A1 *	1/2004	Godshaw et al.	190/18 A
2007/0045370	A1 *	3/2007	Hsieh	224/576
2009/0052808	A1	2/2009	Pham et al.	
2012/0048816	A1	3/2012	Brown	

* cited by examiner

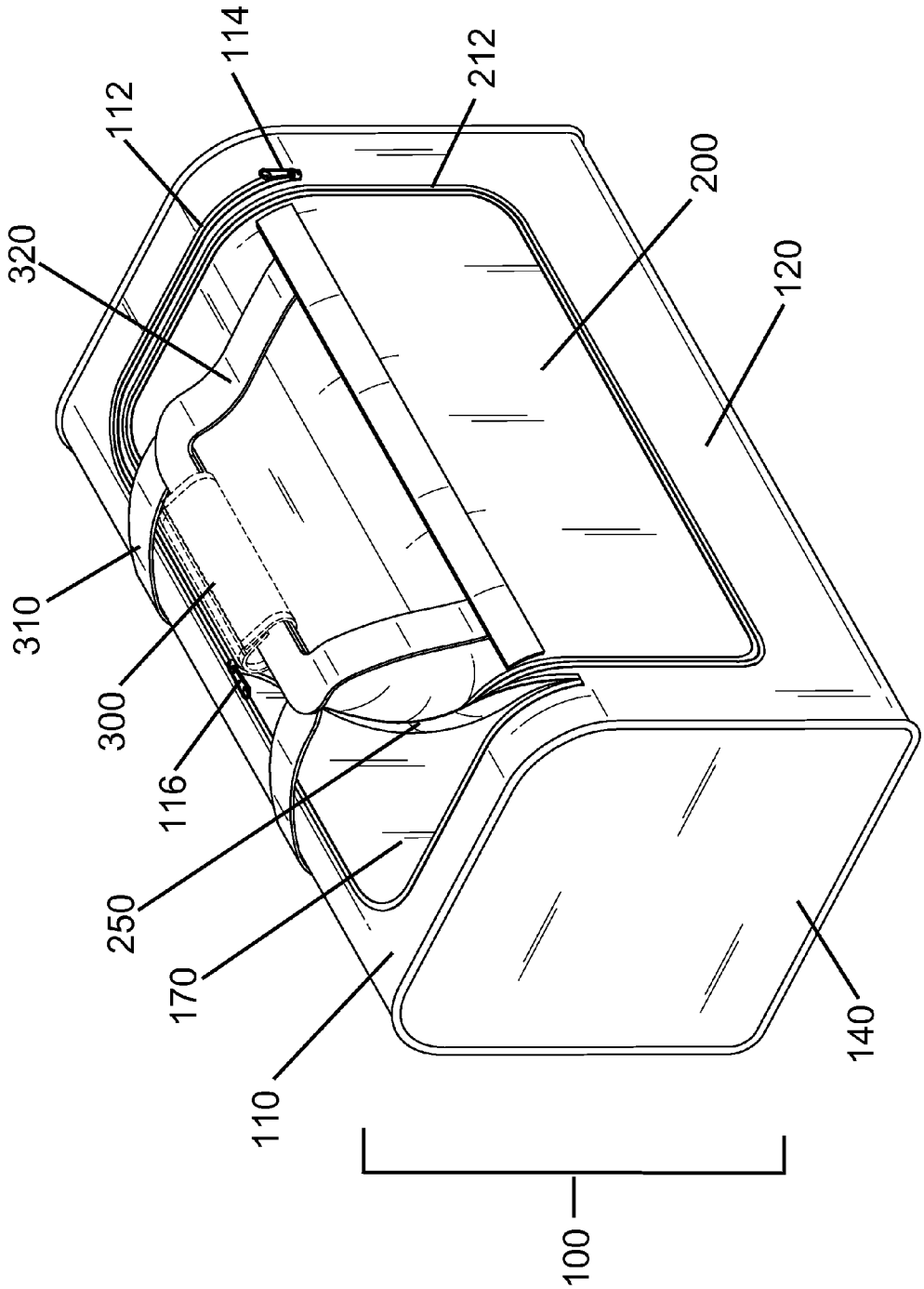

Figure 1

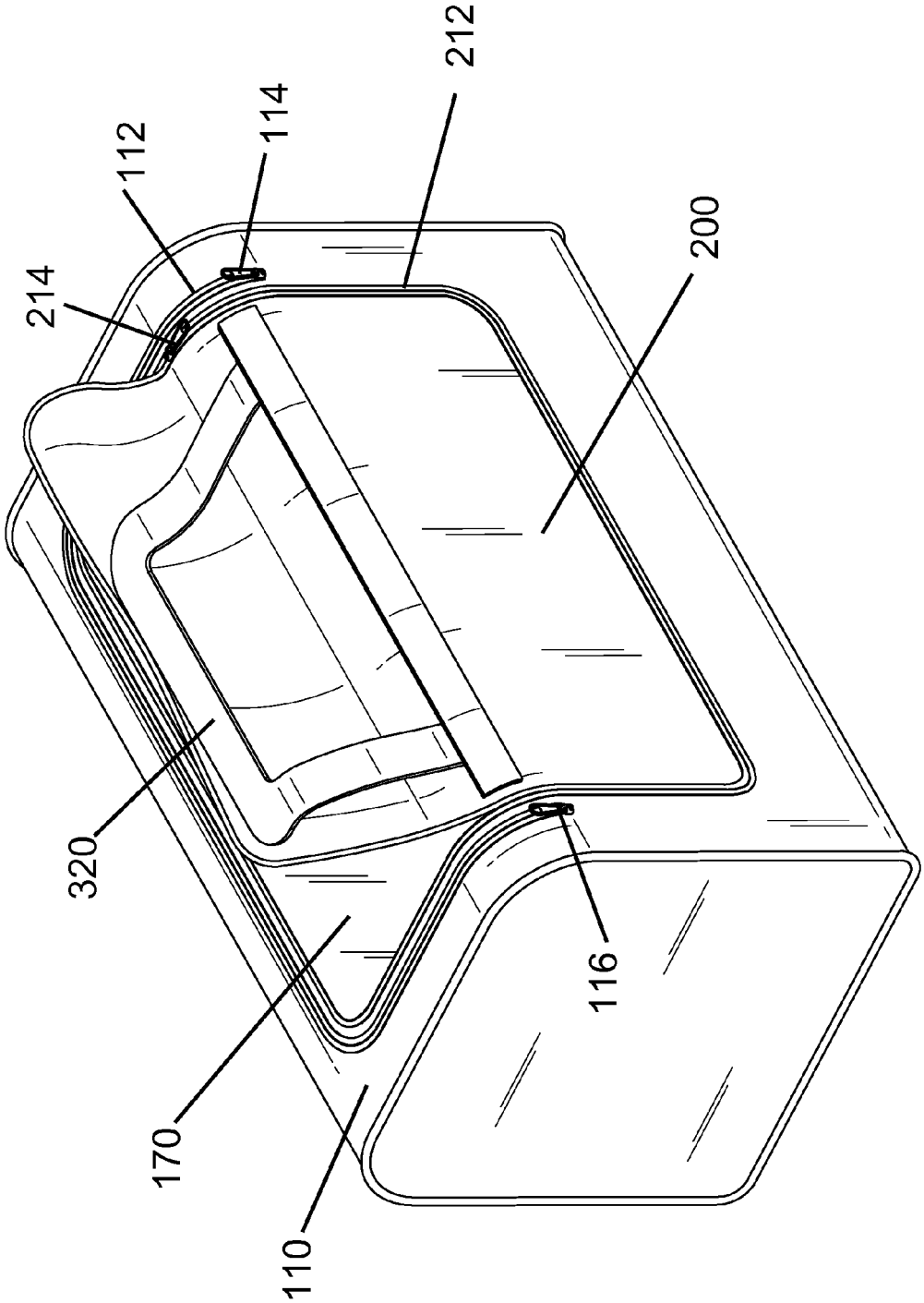

Figure 2

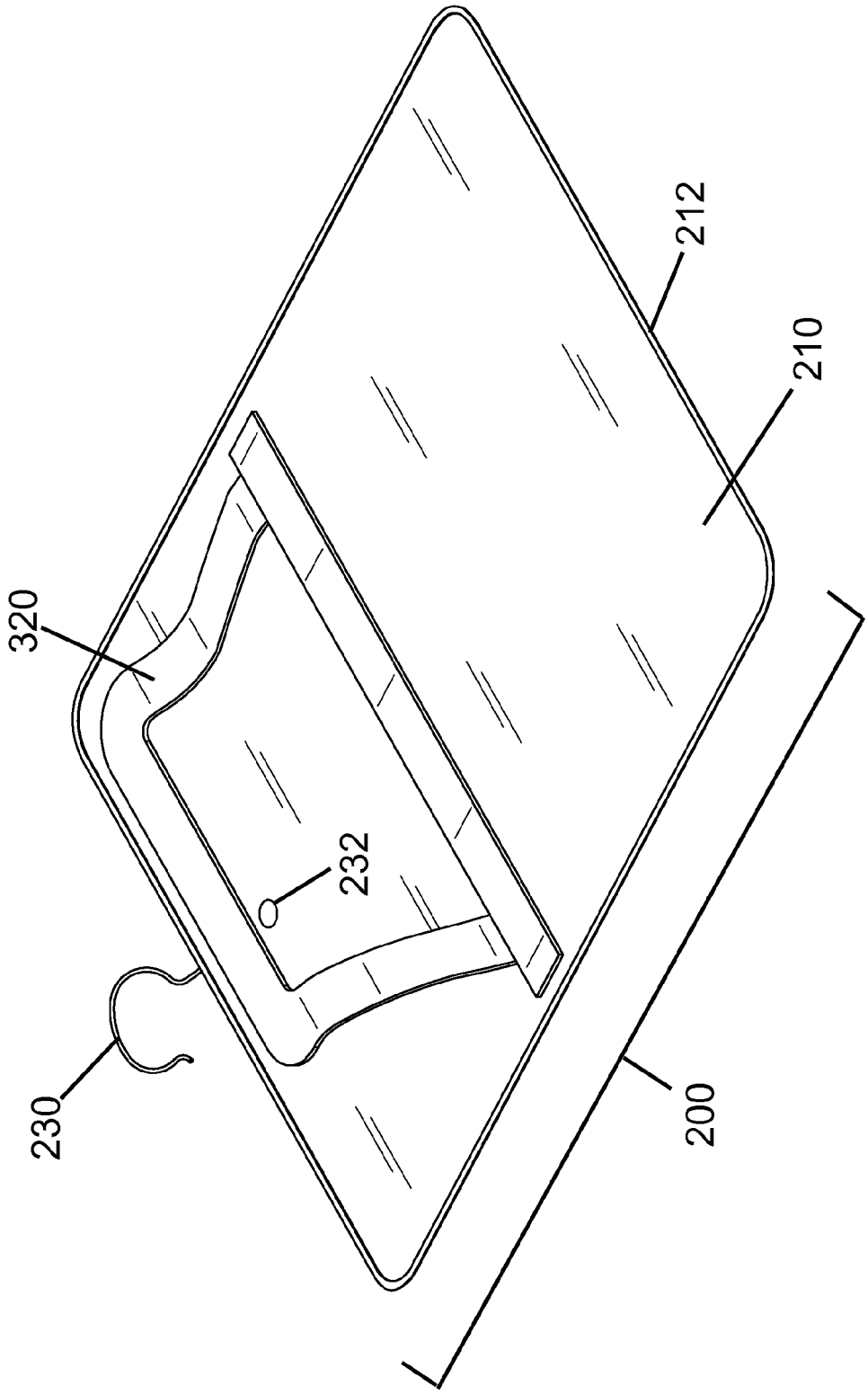

Figure 3

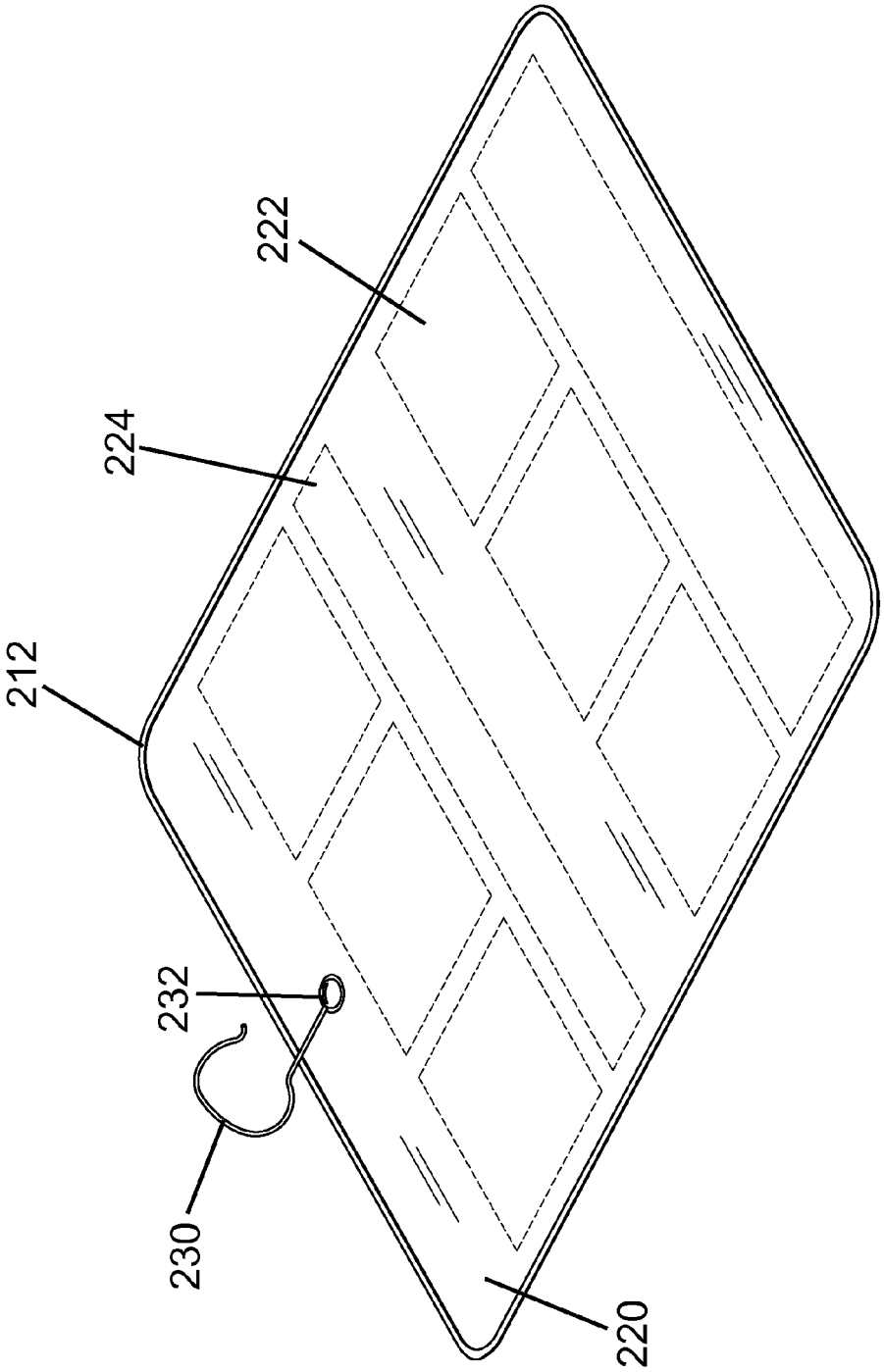

Figure 4

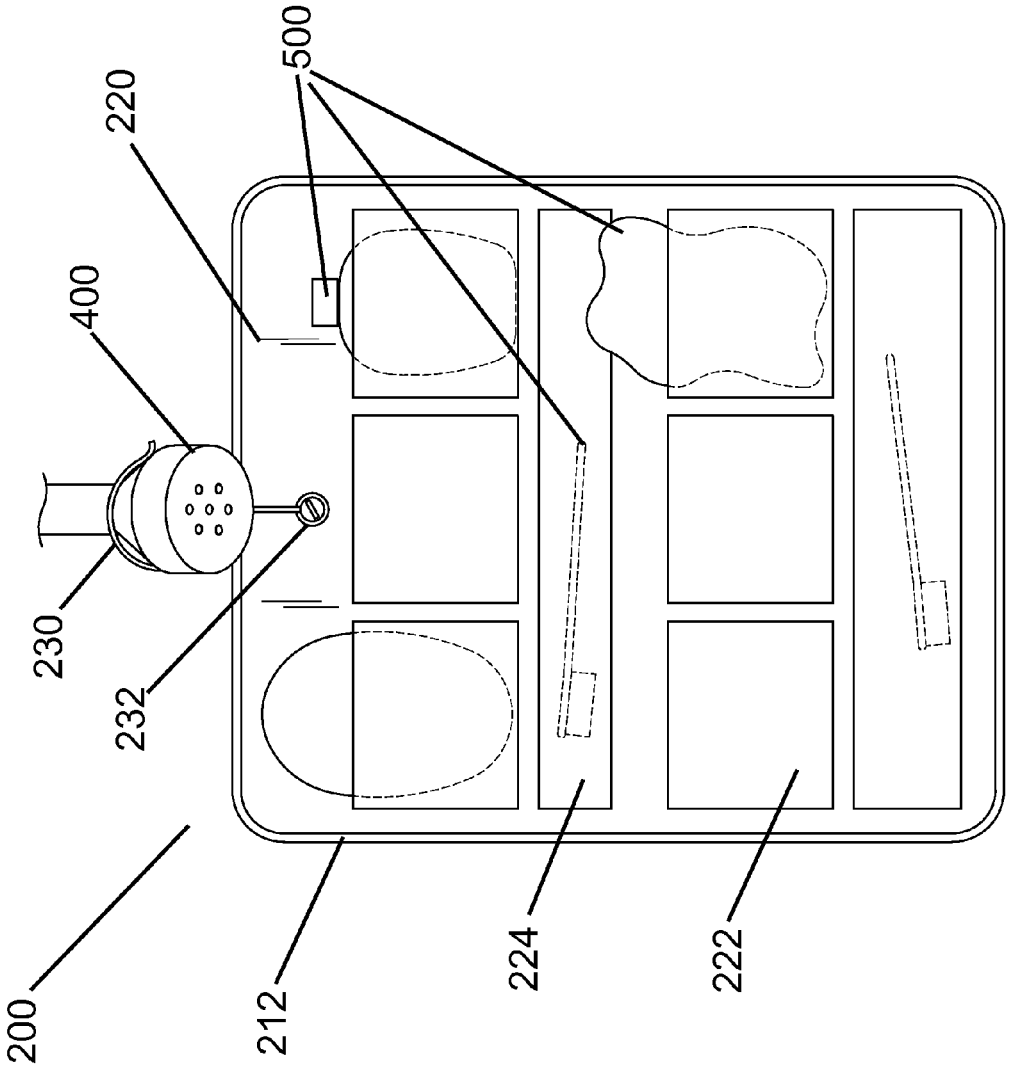

Figure 5

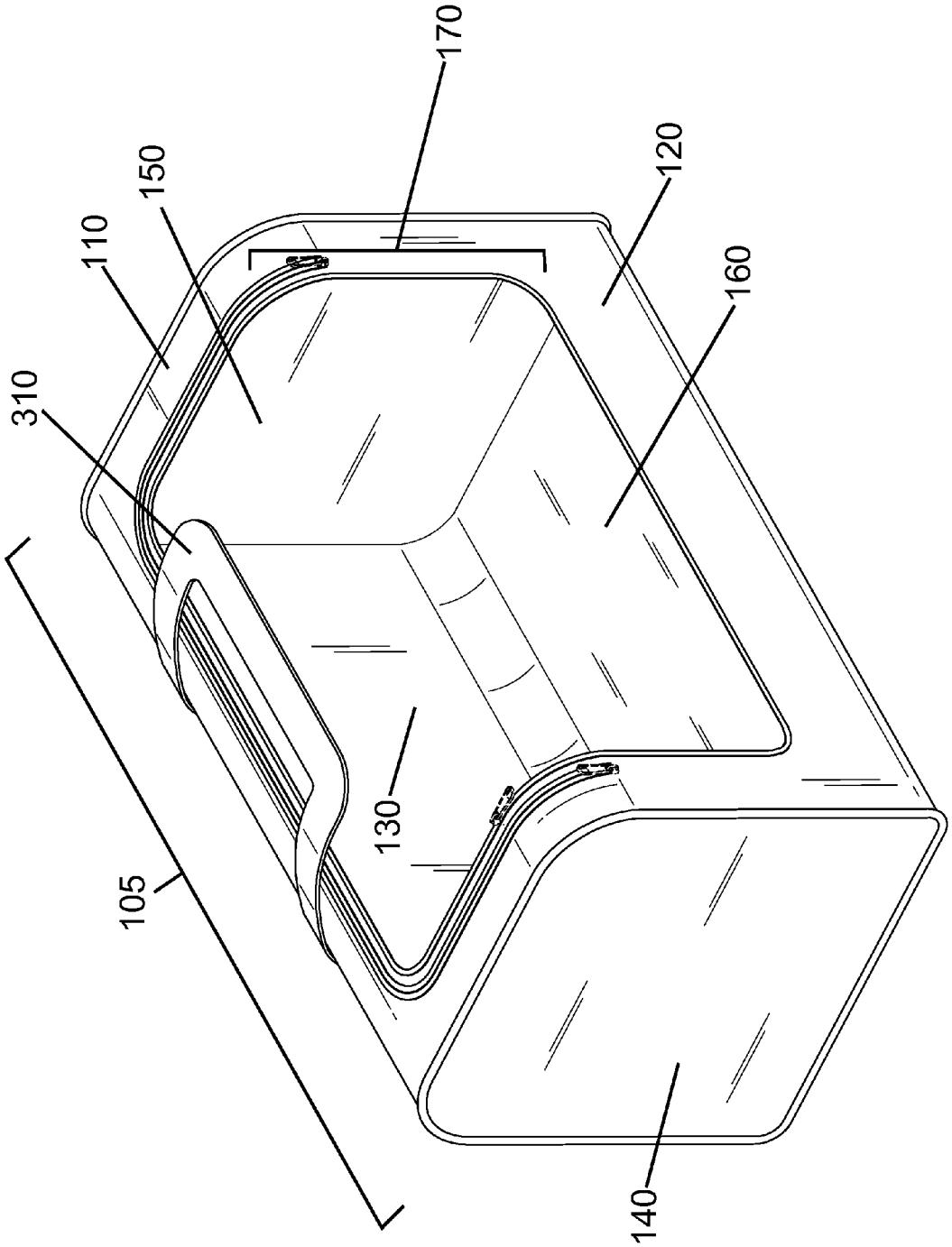

Figure 6

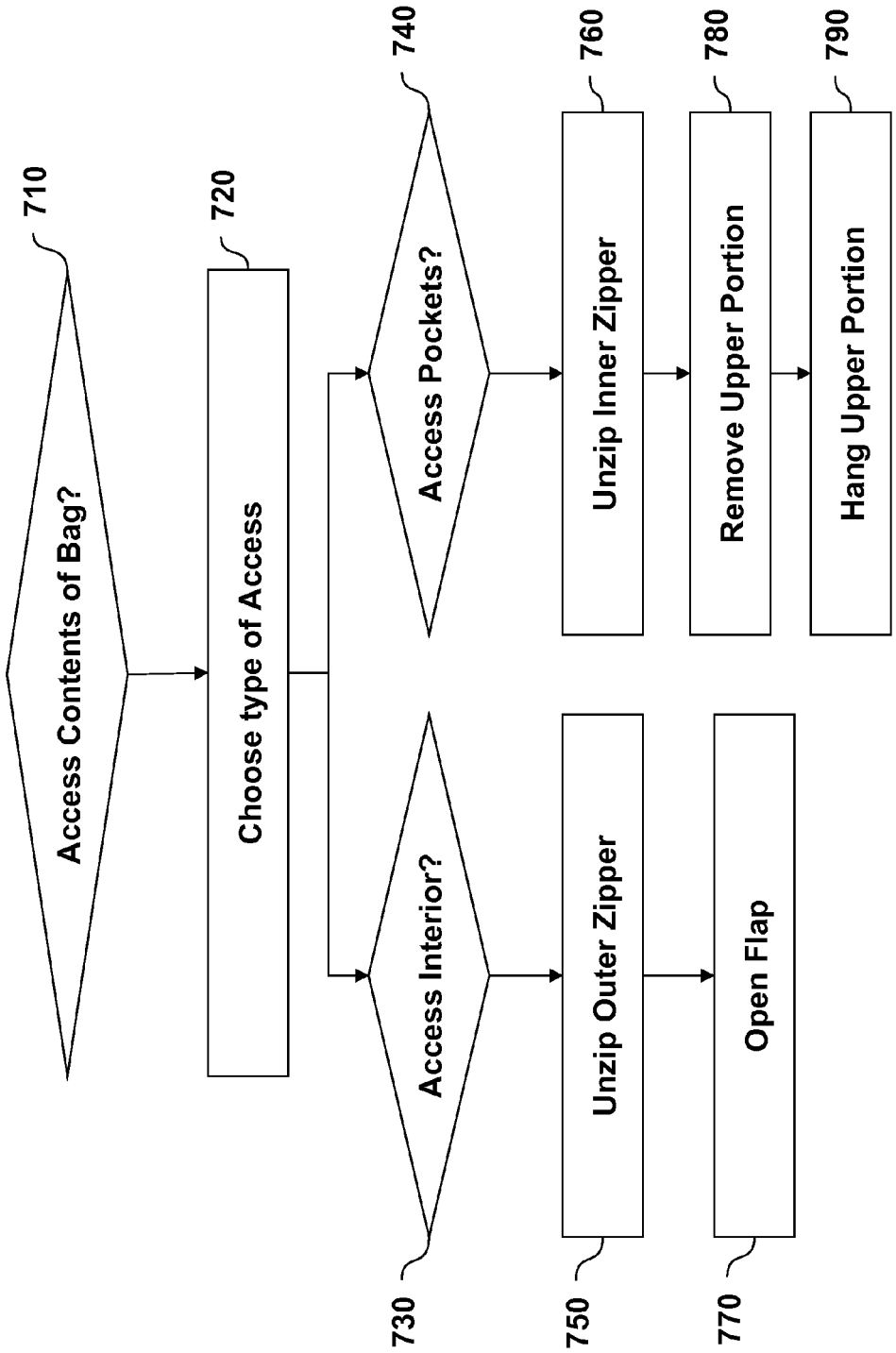
710
Access Contents of Bag?
720
Choose type of Access
730
Access Interior?
740
Access Pockets?
750
Unzip Outer Zipper
760
Unzip Inner Zipper
770
Open Flap
780
Remove Upper Portion
790
Hang Upper Portion

Figure 7

BAG WITH DETACHABLE HANGING ACCESSORY PORTION

FIELD OF THE DISCLOSED TECHNOLOGY

The disclosed technology relates generally to luggage and, more specifically, to bag with a removable portion.

BACKGROUND OF THE DISCLOSED TECHNOLOGY

Various types of luggage and baggage for traveling are known in the art. Many bags and suitcases seek to simplify the transporting and/or accessing of contents stored therein. Others are aimed at organizing all of the personal belongings carried by travelers. Bags have been introduced with a multitude of pockets and compartments to help travelers keep their belongings separate and secure, while maintaining accessibility. A popular piece of luggage amongst travelers is a toiletry/accessory bag that is compact, foldable, and suitable to be hung up in a bathroom or bedroom of their destination.

Still further, numerous travel restrictions have been introduced which affect a traveler's ability to travel with a lot of personal belongings. One such measure has been the crackdown by airlines on the size of carry-on and checked baggage. Many airlines charge travelers fees for over-sized bags, or even carry-on bags, in excess of one. These ever-increasing travel restrictions have forced travelers to seek innovative and resourceful ways of carrying the same quantity of items, while taking up significantly less space. For instance, it may be difficult for a traveler to fit an accessory/toiletry bag within a checked or carry-on baggage. If carrying these bags separately, a traveler may be charged excess bag fees by an airline or other transportation provider. Moreover, a traveler packing everything in a single bag or suitcase may find it difficult to quickly and conveniently access toiletries and/or accessories while in transit or upon reaching his/her destination.

SUMMARY OF THE DISCLOSED TECHNOLOGY

Therefore, it is an object of the disclosed technology to provide a single bag with a built-in removable and hangable accessory portion that forms a section of the bag with pockets which are accessible when opening the bag, as well as when removing a portion thereof to separately hang.

It is a further object of the disclosed technology to provide an improved bag partially formed by a detachable and suspendable portion with accessible pockets for conveniently storing items.

As such, in an embodiment of the disclosed technology, a bag is used for storing and/or transporting items. Such a bag combines a travel accessory bag and a regular bag. The bag has a unitary bottom, left, right, and back side, and a removably attached flexible top and front side. The unitary bottom, left, right, and back side, and the top and front side collectively form a contiguous unitary bag. For purposes of this disclosure, "bottom side" refers to the base of the bag, the bottom being the portion of the bag abutting a surface when the bag is positioned upright on that surface. The "top side" refers to the side directly opposite to the bottom, the top being generally where handles and/or straps would be located. "Front and back sides" refers to the elongated sides of the bag, the "front side" being the location of an opening mechanism on bags which do not open entirely from the top, and the "back side" being the non-descript rear side of the bag having few or no features. The "left and right sides" refers to the opposing sides forming the ends of a generally elongated bag, "the left and right sides" having a smaller surface area than that of the top, bottom, front and back sides. "Contiguous" refers to a surface which continues without an interruption larger than 1 cm. "Refers to" should be understood as a definition.

The removably attached flexible top and front side has at least one pocket. The top and front side may further have a hanging device, with a hook, attached thereto. When removed from the unitary bottom, left, right, and back side, the removably attached flexible top and front side is capable of being laid flat. That is, the flexible nature of the material enables the top and front side to be manipulated. In a hanging configuration, the top and front side will be generally planar, where "generally," for purposes of this disclosure, is defined as "what an ordinary observer would consider as such" or "at least 90% being as such." Thus, when the top and front side is called "generally planar," even though it may have pockets, fasteners, and other three-dimensional parts, it is still considered to be "generally planar."

In further embodiments, the removably attached flexible top and front side further forms at least a portion of the back side. Still further, the unitary bottom, left, right, and back side also forms at least a portion of the top side and/or the front side. In an embodiment, the bag also has a resealable opening that runs parallel to a portion of a perimeter of the removably attached flexible top and front side. That is, the resealable opening has a fastener similar to that used to attach the top and front side to the unitary bottom, left, right, and back side. A "perimeter" is defined as at least 95% of the length around one continuous edge of an object. The resealable opening is arranged such that the bag may be opened and closed without fully or partially detaching the flexible top and side. In embodiments, a zipper is used to fasten the flexible top and side to the unitary bottom, left, right, and back side. Furthermore, a zipper may be used for the resealable opening.

A method of using the bag described above is carried out, not necessarily in the following order, by: A) detaching the removably attached flexible top and front side from the unitary bottom, left, right, and back side, B) suspending the removably attached flexible top and front side from a fixed member such that access is provided to the pocket, and C) attaching the removably attached flexible top and front side to the unitary bottom, left, right, and back side to form the contiguous unitary bag.

In another embodiment of the disclosed technology, a bag has a bottom, sides, and top. A lower portion forms the bottom and at least a portion of the sides of the bag. A detachable upper portion having a pocket forms at least a portion of at least one side and/or the top of the bag. It should be understood that the use of "and/or" is defined inclusively, such that the term "a and/or b" should be read to include the sets: "a and b," "a or b," "a," "b." Thus, for example, the upper portion may form a portion of both the right side and the top of the bag, or, alternatively, the upper portion may just form a portion of the top of the bag.

A first fastener removably attaches the upper portion to the lower portion, such that, when attached, the upper portion and the lower portion form a contiguous unitary bag. A distinct, second fastener closably fastens the bag, thereby providing access to the contents of the bag. "Closably fastensing" or "closably fastening" is defined as releasably binding the edges of an opening of fabric or other flexible material. Further, "releasably" is defined as capable of being attached and detached, or coupled and uncoupled, repetitively without damaging or otherwise affecting the releasable parts. In

embodiments, the second fastener outlines a flap formed by at least part of the upper portion.

In further embodiments, the upper portion has a hook rotatably affixed thereto. A "hook" is defined as a device having a bend or U-shape configured in a way that the bend or U-shape may be removably mounted onto a fixed object or member, such that the force of gravity keeps the hook mounted thereupon. In still further embodiments, the upper portion may be laid flat when detached from the lower portion. That is, the upper portion may be rested on a flat surface in a flattened condition. "Flat" is defined as having an elongated side, which, in a configuration, is at least 95% planar. An "elongated side" is elongated and forms a surface versus a narrow side which is an edge or joining side of two elongated sides.

In yet another embodiment of the disclosed technology, a method uses a bag having a plurality of sides, the sides being a top, bottom, front and back. The method is carried out, not necessarily in the following order, by: A) unfastening a fastener retaining an upper portion of the bag to a lower portion of the bag, the upper portion forming at least a portion of at least one side of said plurality of sides, B) removing the upper portion from the lower portion, and C) suspending the upper portion such that at least one pocket of the upper portion is accessible. A "fastener" is defined, for purposes of this specification, as a device used for releasably binding the edges of two sections of fabric or other flexible material. An additional step may be provided of fastening the fastener such that the upper portion and the lower portion form a contiguous unitary bag.

In further embodiments of the disclosed method, the fastener is a zipper, and the step of unfastening involves unzipping the upper portion. Still further, the upper portion further forms at least a portion of another side of the plurality of sides of the bag.

BRIEF DESCRIPTION OF THE DRAWINGS

FIGS. **1** and **2** show a perspective view of a bag with an upper portion of an embodiment of the disclosed technology.

FIG. **3** shows a top perspective view of an upper portion of an embodiment of the disclosed technology.

FIG. **4** shows a bottom perspective view of an upper portion of an embodiment of the disclosed technology.

FIG. **5** shows an elevation view of a hanging upper portion with accessories of an embodiment of the disclosed technology.

FIG. **6** shows a perspective view of the lower portion of the bag of FIGS. **1**, **2** and **3**, with the upper portion detached.

FIG. **7** shows a flow chart outlining steps of a method of using a bag of an embodiment of the disclosed technology.

DETAILED DESCRIPTION OF EMBODIMENTS OF THE DISCLOSED TECHNOLOGY

In an embodiment of the disclosed technology, a hand-carry bag (also referred to, herein, as a "bag") has at least one fastener for opening and removing a suspendable upper portion. The fastener may be a zipper running between a lower portion and an upper portion, such that the zipper surrounds the upper portion. The lower portion forms a bottom and at least part of the sides, or a majority of the sides, of the bag forming a closed bag when the portions are fully attached thereto by the fastener. The upper portion forms a top and at least a part of the sides, or a minority of the sides, of the bag. The fastener extends around the periphery of the upper portion (also referred to, herein, as a "removably attached flexible top and front side"), making the upper portion disconnectable from the lower portion.

Upon disconnecting the upper and lower portions from one another, the lower portion continues to function as a bag, able to hold contents therein. The upper portion flattens, with a plurality of compartments thereto attached, and has a hanging mechanism for hanging the upper portion.

Embodiments of the disclosed technology will become clearer in view of the following description of the drawings.

FIGS. **1** and **2** show a perspective view of a bag with a removable upper portion of an embodiment of the disclosed technology. The bag **100** of FIGS. **1** and **2** is generally rectangular, having a top side **110**, bottom side **160** (not shown), front side **120**, back side **130**, and left and right sides **140**, **150**. While the bag **100** of FIGS. **1** and **2** is rectangular, the bag may be any shape, size, and/or dimensions. The bag **100** may be formed on any type of material, either semi-rigid or flexible, and the bag may have rigid sections.

The bag **100** has an inner fastener **212** surrounding an upper portion **200** thereof. In FIGS. **1** and **2**, the inner fastener **212** is represented as a zipper (herein referred to as "inner zipper **212**"); however, any type of fastener may be used, such as, for example, buttons, hook & loop fasteners, and/or buckles. The inner zipper **212** runs along the entire perimeter of the upper portion **200**, such that the inner zipper **212** may be completely unzipped, thereby detaching the upper portion **200** from the rest of the bag **100** (i.e., the lower portion **105**). The inner zipper **212** is opened and closed by an inner pull tab **214**. The portion of the bag **100** that remains after the upper portion **200** has been removed may be referred to as the lower portion **105**, or the remainder of the bag, because it may form a majority of the bag. That is, the lower portion **105** may account for approximately 75% or more of the exterior of the bag **100**. Thus, for purposes of the specification, the upper portion **200** may be referred to as being detached from the bag **100** or the lower portion **105**. When detached, the lower portion **105** remains, having an opening into the interior **170** of the bag **100**. In this manner, the lower portion **105** may still serve a function of holding goods and/or clothing of the bag **100**.

The bag **100** also has an outer fastener **112** for opening and closing the bag without detaching the upper portion **200**. In FIGS. **1** and **2**, the outer fastener **112** is represented as a zipper (herein referred to as "outer zipper **112**"); however, any type of fastener may be used as described above with regard to the inner fastener **212**. The outer zipper **112** runs partially, but not entirely, around the perimeter of the inner zipper **212**. In embodiments, the outer zipper **112** may run along approximately 50% of the perimeter of the inner zipper **212**. The outer zipper **112** has two outer pull tabs **114**, **116**. When the outer zipper **112** is opened and closed, the bag **100** is accessed through the opening **170** like any other bag known in the art. That is, a section of the upper portion **200** acts as a closable flap **250**. If the outer zipper **112** is in an entirely unzipped state, the generally rectangular flap **250** is still attached to the bag by one of its four edges.

Referring specifically to FIG. **1**, the bag **100** is being used with the flap partially open. The outer zipper **112** is partially unzipped to grant access to the interior **117** of the bag **100**, while retaining the upper portion **200**. The second pull tab **116** is positioned approximately halfway along the perimeter of the outer zipper **212**. The inner zipper **212** remains closed, and thus the upper portion **200** is retained by the bag **100**. Referring still to FIG. **1**, a handle **300** is shown disposed around straps **310**, **320**. The handle **300** may be formed of fabric having a fastener, where "fastener" is defined for purposes of this specification as a device used for releasably

binding the edges of two sections of, or an opening in, fabric or other flexible material. The fastener may be buttons, Velcro, or any other type of fastener. The handle **300** releasably encloses portions of the straps **310**, **320**. The first strap **310** is affixed to the top side **110** and/or the back side **130** of the bag **100**. The second strap **320** is affixed to the upper portion **200**. Thus, when the upper portion **200** is in a zipped configuration, the handle **300** may enclose both straps **310**, **320**, so that the bag can be carried and transported.

Referring now to FIG. **2**, the bag **100** is shown with the upper portion **200** partially unzipped. The inner pull tab **214** is positioned such that approximately half of the inner zipper **212** is unzipped. Upon entirely unzipping the inner zipper **212**, the upper portion **200** becomes detached from the lower portion **105**. In this view, the outer zipper **112** is entirely zipped and closed. Moreover, the handle **300** is opened and removed. As such, the upper portion **200** may be lifted from the bag **100** by the second strap **320**.

FIGS. **1** and **2** represent but one embodiment of the disclosed technology. The bag **100** must not necessarily be rectangular. The bag **100** may have any form, shape, size, and/or dimensions. Likewise, the upper portion **200** may form only a portion of one side of the bag **100**, or the upper portion may form three, four, five, etc. sides of the bag **100**. The upper portion **200** may also be any size, shape, and/or dimensions. For example, if the bag has a cylindrical shape, the upper portion **200** may form a curved rectangular portion of a wall of the cylindrical bag. The bag **100** may be formed of fabric, textile, leather or any other material that is used to construct luggage, purses, duffel bags and the like.

FIG. **3** shows a top perspective view of an upper portion of an embodiment of the disclosed technology. In the view shown, the upper portion **200** is completely detached from the bag **100**. The outer perimeter of the upper portion **200** is lined with the teeth of the inner zipper **212**. The upper portion **200** is laid flat. The flexible nature of the material used to construct the upper portion **200** gives the upper portion the versatility to be folded, flattened or otherwise manipulated to suit the needs of a user. An outer surface **210** of the upper portion **200** has the second strap **320** attached thereto. As briefly discussed above, the strap **320** may still be used for carrying and transporting the upper portion **200**.

A hanging device, in this case a hook **230**, extends from an underside of the upper portion **200**. The hook **230** is used for hanging, tethering and/or carrying the upper portion **200**. The hook **230** is rotatably fastened to a point **232** on the upper portion **200**. Thus, the hook **230** may rotate freely about the point **232**. When the upper portion **200** is reattached to the bag **100**, the hook **230** may be rotated inward so as not to obstruct the zippering of the inner zipper **212**. The hanging device may be any other fastening mechanism known for suspending items, such as, for example, hook & loop straps, buckled straps, or any other releasable attachment mechanism.

FIG. **4** shows a bottom perspective view of an upper portion of an embodiment of the disclosed technology. The inner surface **220** of the upper portion **200** has multiple compartments or pockets **222**, **224** (herein "pockets") for storing accessories, toiletries, and/or the like. The pockets **222**, **224** may vary in size and/or configuration. In the embodiment shown, a longitudinal pocket **224** is provided for storing elongated items. A rectangular pocket **222** is provided for storing smaller items. The pockets **222**, **224** may further employ zippers or some other fastening mechanism for enclosing contents therein.

The hook **230** extends from a point **232** on the inner surface **220**. The point **232** may be a nut & bolt arrangement, configured such that the hook **230** may be freely rotated and/or completely removed from the upper portion **200**. The hook **230** is adapted to be hung or suspended from any fixed location. Such a hook **230** is convenient when the bag **100** is used for travel purposes because the upper portion **200** may be easily detached and suspended for immediate access upon reaching a destination.

FIG. **5** shows an elevation view of a hanging upper portion with accessories of an embodiment of the disclosed technology. In the example shown, the upper portion **200** is suspended from a shower head **400**. Thus, the upper portion **200** is being used as a shower caddy of sorts. The inner surface **220** is facing outwards, thus granting convenient access to the pockets **222**, **224**. Numerous items **500** are stored in the various pockets **222**, **224** of the upper portion **200**. The longitudinal pockets may store elongated items, such as, for example, a toothbrush **500** as shown in FIG. **5**. The rectangular pockets **222** may store, for example, small containers or soap bars. The shower head **400** is one example of a fixed member from which the upper portion **200** may be suspended. The upper portion **200** is versatile in that it may be mounted on any location and used for any application.

FIG. **6** shows a perspective view of the lower portion of the bag of FIGS. **1**, **2** and **3**, with the upper portion detached. With the upper portion **200** removed, the lower portion **105** may still retain its structural integrity, such that it stands upright and is capable of storing contents therein. The lower portion **105** may also be held upright by the contents occupying the interior **170**. When used for travel, the lower portion **105** without the upper portion **200** provides easy access to the contents of the bag **100**, such that no flap or lid obstructs direct access to the interior **170**. The lower portion **105** may thus be used as a shelf or the like for storing the contents of the bag **100**. As described, the bag **100** has a top side **110**, bottom side **160**, front side **120**, back side **130**, left side **140**, and right side **150**. In the embodiment shown, portions of the top side **110** and front side **120** are formed by the lower portion **105** of the bag **100**, and thus remain after the upper portion **200** has been detached. The first strap **310** is affixed to the lower portion **105**, and also remains after the upper portion **200** is removed.

FIG. **7** shows a flow chart outlining steps of a method of using a bag of an embodiment of the disclosed technology. The method begins with step **710** whereby a user desires to access the contents of the bag. In step **720**, the user decides how he or she desires to access the contents of the bag. If the user merely desires to access the interior portion of the bag, as in step **730**, then the user proceeds to unzip the outer zipper (step **750**). Alternatively, if the user desires to access items stored in the pockets of the upper portion as in step **740**, the user will unzip the inner zipper (step **760**). After fully unzipping the inner zipper, in step **780**, the user then removes the upper portion from the bag. Then, in step **790**, the upper portion may be tethered or suspended from a stationary object, such as a shower head or towel rack.

It should be noted that while step **740** is entitled "Access pockets", in step **730** entitled "access interior" one may also access the pockets. That is, in unzipping or unfastening to access the interior of the bag, the pockets are also accessible in the interior of the bag. The pockets on the removable upper portion of the bag are thus accessible while the upper portion is zipped or otherwise fastened into the bag, as well as when the removable upper portion is removed.

While the disclosed technology has been taught with specific reference to the above embodiments, a person having ordinary skill in the art will recognize that changes can be made in form and detail without departing from the spirit and the scope of the disclosed technology. The described embodiments are to be considered in all respects only as illustrative

and not restrictive. All changes that come within the meaning and range of equivalency of the claims are to be embraced within their scope. Combinations of any of the methods and apparatuses described hereinabove are also contemplated and within the scope of the invention.

I claim:

1. A bag with a unitary bottom, left, right, front and back sides, and a top, said bag comprising:

a lower portion fully forming said bottom, said left, said right, and said back sides and at least a portion of said front and top sides of said bag;

a fully detachable upper portion comprising a removably attached part of said front and said top side, forming at least a portion of said front and top sides of said bag, and having a perimeter extending around an entirety of said detachable upper portion and at least one pocket enclosed and secured to said detachable upper portion on three sides;

an inner fastener removably attaching said upper portion to said lower portion, said inner fastener extending around an entirety of said perimeter of said detachable upper portion thereof such that said inner fastener extends across a majority of a length and width of said top side and said front side such that when said inner fastener is detached, at least a portion of all sides of said bag remain and when said upper portion is completely disconnected from said bag, said top, left, right, back, and front sides of said bag retain their shape;

an outer fastener running along and adjacent to portions of at least three of four sides of said inner fastener and parallel to all four sides of said inner fastener, said outer fastener extending around an exterior of said first inner fastener, and closably fastening an opening into said bag such that said detachable upper portion doubles as a three or more sided exterior flap for accessing an interior of said bag, wherein said outer fastener is distinct from said inner fastener, such that said inner fastener is situated on an interior of said outer fastener;

wherein when said inner fastener and said outer fastener are fastened, said upper portion and said lower portion are attached and form a contiguous unitary length of fabric along either side of said inner fastener along a length of said inner fastener; and

wherein said at least one pocket of said detachable upper portion remains coupled to said interior when said inner fastener is completely unfastened and said detachable upper portion is completely detached, and such that said pocket remains accessible when either said inner fastener or said outer fastener is completely unfastened.

2. The bag of claim **1**, wherein said outer fastener follows a path of said three or more sided flap formed by at least a portion of said detachable upper portion on said exterior of said inner fastener.

3. The bag of claim **2**, wherein said upper portion bends around a curve when attached to said lower portion on all sides and flat when detached from said lower portion and hung from a first end.

4. The bag of claim **1**, wherein said removably attached flexible top and front side comprises a rotatably affixed hanging device.

5. The bag of claim **4**, wherein said hanging device is a hook.

6. The bag of claim **5**, wherein said perimeter extending around the entirety of said removably attached top and front side is bent when attached to said bag and in a flat two-dimensional plane when said removably attached flexible top and front side is hanging from said hanging device.

7. The bag of claim **1**, wherein said removably attached flexible top and front side further forms at least a portion of said back side.

8. The bag of claim **1**, wherein said unitary bottom, left, right, and back side also forms at least a portion of said top side.

9. The bag of claim **1**, wherein said unitary bottom, left, right, and back side also forms at least a portion of said front side.

10. The bag of claim **1**, said inner fastener further comprising a resealable opening which simultaneously opens said bag and detaches said detachable upper portion.

11. The bag of claim **10**, wherein at least a length of said resealable opening runs parallel said perimeter of detachable upper portion.

* * * * *